SUNGROW
Clean power for all

User Manual

Smart Communication Box

COM100D-EU

COM100D-EU-UEN-Ver14-202407

All Rights Reserved

All Rights Reserved

No part of this document can be reproduced in any form or by any means without the prior written permission of Sungrow Power Supply Co., Ltd (hereinafter "SUNGROW").

Trademarks

SUNGROW and other Sungrow trademarks used in this manual are owned by SUNGROW.

All other trademarks or registered trademarks mentioned in this manual are owned by their respective owners.

Software Licenses

- It is prohibited to use data contained in firmware or software developed by SUNGROW, in part or in full, for commercial purposes by any means.
- It is prohibited to perform reverse engineering, cracking, or any other operations that compromise the original program design of the software developed by SUNGROW.

About This Manual

The manual mainly contains the product information, as well as guidelines for installation, operation, and maintenance. The manual does not include complete information about the photovoltaic (PV) system. Readers can get additional information at **www.sungrowpower.com** or on the webpage of the respective component manufacturer.

Validity

This manual is valid for the following models:

- COM100D-EU

It will be referred to as "COM100" hereinafter unless otherwise specified.

Type Description

Type	Configuration	Communication Manner
COM100D-EU	Includes the Logger1000A-EU, switch-mode power supply, surge protection device, micro circuit breaker, and lighting device inside	Support of 4G, WLAN and Ethernet communication

The Logger1000A-EU is referred to as the "Logger1000" for short unless otherwise specified.

Target Group

This manual is intended for professional technicians who are responsible for installation, operation, and maintenance of inverters, and users who need to check inverter parameters.

The product must only be installed by professional technicians. The professional technician is required to meet the following requirements:

- Know electronic, electrical wiring and mechanical expertise, and be familiar with electrical and mechanical schematics.
- Have received professional training related to the installation and commissioning of electrical equipment.
- Be able to quickly respond to hazards or emergencies that occur during installation and commissioning.
- Be familiar with local standards and relevant safety regulations of electrical systems.
- Read this manual thoroughly and understand the safety instructions related to operations.

How to Use This Manual

Please read this manual carefully before using the product and keep it properly at a place for easy access.

All contents, pictures, marks, and symbols in this manual are owned by SUNGROW. No part of this document may be reprinted by the non-internal staff of SUNGROW without written authorization.

Contents of this manual may be periodically updated or revised, and the actual product purchased shall prevail. Users can obtain the latest manual from **support.sungrowpower.com** or sales channels.

Security Declaration

For details on the product's network security vulnerability response process and vulnerability disclosure, please visit the following website: https://en.sungrowpower.com/security-vulnerability-management.

Symbols

This manual contains important safety instructions, which are highlighted with the following symbols, to ensure personal and property safety during usage, or to help optimize the product performance in an efficient way.

Please carefully understand the meaning of these warning symbols to better use the manual.

⚠ DANGER

Indicates high-risk potential hazards that, if not avoided, may lead to death or serious injury.

⚠ WARNING

Indicates moderate-risk potential hazards that, if not avoided, may lead to death or serious injury.

⚠ CAUTION

Indicates low-risk potential hazards that, if not avoided, may lead to minor or moderate injury.

NOTICE

Indicates potential risks that, if not avoided, may lead to device malfunctions or financial losses.

“NOTE” indicates additional information, emphasized contents or tips that may be helpful, e.g., to help you solve problems or save time.

Contents

All Rights Reserved..... I
About This Manual..... II
1 Safety Instructions..... 1
1.1 Unpacking and Inspection..... 2
1.2 Installation Safety..... 3
1.3 Electrical Connection Safety..... 3
1.4 Operation Safety..... 4
1.5 Maintenance Safety..... 4
1.6 Disposal Safety..... 5
2 Product Description..... 6
2.1 Function Introduction..... 6
2.2 Performance Characteristics..... 6
2.3 Networking Application..... 6
2.4 Product Introduction..... 7
3 Mechanical Mounting..... 9
3.1 Unpacking and Inspection..... 9
3.2 Location Requirements..... 10
3.3 Installation Tools..... 10
3.4 Installation Method..... 10
3.4.1 Wall-Mounting..... 11
3.4.1.1 Concrete Wall..... 11
3.4.1.2 Metal Surface..... 13
3.4.2 Pole-Mounting (Optional)..... 14
3.5 Magnetic Base Antenna Connection (Optional)..... 15
4 Electrical Connection..... 17
4.1 Waterproof Terminal Description..... 17
4.2 Internal Structure..... 18
4.3 Preparation Before Cable Connection..... 19

4.4 Ground Connection.....20
4.5 External AC Power Supply Connection.....20
4.6 RS485 Port.....22
4.6.1 Connect to Device with RS485 Port.....22
4.6.2 Connect to Device with RJ45 Port.....23
4.7 Ethernet Connection.....25
4.8 External DC Power Supply Connection.....25
5 Commissioning.....27
5.1 Inspection Before Commissioning.....27
5.2 Commissioning Steps.....27
6 WEB Interface.....29
6.1 Operating Environment Requirements.....29
6.2 PC Network Configuration.....29
6.3 Login Steps.....30
6.4 Interface Introduction.....31
7 Appendix.....32
7.1 Technical Parameters.....32
7.2 Dry Contact Cable Requirements.....33
7.3 Quality Assurance.....33
7.4 Contact Information.....34

1 Safety Instructions

When installing, commissioning, operating, and maintaining the product, strictly observe the labels on the product and the safety requirements in the manual. Incorrect operation or work may cause:

- Injury or death to the operator or a third party.
- Damage to the product and other properties.

⚠ WARNING

- **Do not perform any operation on the product (including but not limited to, handling, installing, powering on, or maintaining the product, performing electrical connection, and working at heights) in harsh weather conditions, such as thunder and lightning, rain, snow, and Level 6 or stronger winds. SUNGROW shall not be held liable for any damage to the device due to force majeure, such as earthquakes, floods, volcanic eruptions, mudslides, lightning strikes, fires, wars, armed conflicts, typhoons, hurricanes, tornadoes, and other extreme weathers.**
- **In case of fire, evacuate from the building or product area and call the fire alarm. Re-entry into the burning area is strictly prohibited under any circumstances.**

NOTICE

- **Tighten the screws with the specified torque using tools when fastening the product and terminals. Otherwise, the product may be damaged. And the damage caused is not covered by the warranty.**
- **Learn how to use tools correctly before using them to avoid hurting people or damaging the device.**
- **Maintain the device with sufficient knowledge of this manual and use proper tools.**

- The safety instructions in this manual are only supplements and cannot cover all the precautions that should be followed. Perform operations considering actual onsite conditions.
- SUNGROW shall not be held liable for any damage caused by violation of general safety operation requirements, general safety standards, or any safety instruction in this manual.
- When installing, operating, and maintaining the product, comply with local laws and regulations. The safety precautions in this manual are only supplements to local laws and regulations.
- During the product transport, installation, wiring, maintenance, etc., the materials and tools prepared by users must meet the requirements of applicable local laws and regulations, safety standards, and other specifications. SUNGROW shall not be held liable for any damage to the product caused by the adoption of materials and tools that fail to meet the above-mentioned requirements.
- Operations on the product, including but not limited to, handling, installing, wiring, powering on, maintenance, and use of the product, must not be performed by unqualified personnel. SUNGROW shall not be held liable for any damage to the product resulting from operations done by unqualified personnel.
- Where the transport of the product is arranged by users, SUNGROW shall not be held liable for any damage to the product that is caused by users themselves or the third-party transport service providers designated by the users.
- SUNGROW shall not be held liable for any damage to the product caused by the negligence, intent, fault, improper operation, and other behaviors of users or third-party organizations.
- SUNGROW shall not be held liable for any damage to the product arising from reasons unrelated to SUNGROW.

1.1 Unpacking and Inspection

WARNING

- **Check all safety signs, warning labels and nameplates on devices.**
- **The safety signs, warning labels and nameplates must be clearly visible and cannot be removed or covered before the device is decommissioned.**

NOTICE

After receiving the product, check whether the appearance and structural parts of the device are damaged, and check whether the packing list is consistent with the actual ordered product. If there are problems with the above inspection items, do not install the device and contact your distributor first. If the problem persists, contact SUNGROW in time.

1.2 Installation Safety

DANGER

Make sure there is no electrical connection before installation.

Make sure to avoid the water and electricity wiring in the wall before drilling.

CAUTION

Improper installation may cause personal injury!

- **When moving the product, be aware of the product weight and keep the balance to prevent it from tilting or falling.**

NOTICE

Before operating the product, please check and ensure that tools to be used have been maintained regularly.

1.3 Electrical Connection Safety

DANGER

Before electrical connections, please make sure that the product is not damaged. Otherwise, it may cause danger!

Before electrical connections, please make sure that the product switch and all switches connected to the product are set to "OFF", otherwise electric shock may occur!

DANGER

- **Be sure to use special insulation tools during cable connections.**
- **Note and observe the warning labels on the product, and perform operations strictly following the safety instructions.**
- **Respect all safety precautions listed in this manual and other pertinent documents.**

WARNING

Damage to the product caused by incorrect wiring is not covered by the warranty.

- **Electrical connection must be performed by professionals.**
- **Check the power cord and confirm that the identifier is correct before connecting it.**
- **All cables used shall comply with the requirements of local laws and regulations, and must be firmly attached, properly insulated, and adequately dimensioned.**

NOTICE

Comply with the regulations related to the local grid during wiring.

1.4 Operation Safety

DANGER

- **When the product is running, do not touch its enclosure.**
- **When the product is running, do not touch any wiring terminal of the product. Otherwise, electric shock may occur.**
- **When the product is running, do not disassemble any parts of the product. Otherwise, electric shock may occur.**

1.5 Maintenance Safety

DANGER

Unauthorized modification or use of parts not sold or recommended by SUNGROW may result in fires and electric shocks.

⚠ CAUTION

To prevent misuse or accidents caused by unrelated personnel, post prominent warning signs or demarcate safety warning areas around the product to prevent accidents caused by misoperation.

NOTICE

- **To avoid the risk of electric shock, do not perform any other maintenance operations beyond this manual. If necessary, contact SUNGROW for maintenance. Otherwise, the losses caused are not covered by the warranty.**
- **If a fault occurs, only restart the device after the fault is cleared. Otherwise, the fault may expand, and the device may be damaged.**

1.6 Disposal Safety

⚠ WARNING

Please scrap the product in accordance with relevant local regulations and standards to avoid property losses or casualties.

2 Product Description

2.1 Function Introduction

COM100 integrates the hardware and software functions of Logger1000. It applies to grid-connected scenarios below 540 V, mainly including industrial, commercial, and residential scenarios. It supports various networking modes and installation methods, and is equipped with protections. It features flexible networking, auxiliary maintenance, and easy operations.

2.2 Performance Characteristics

Flexible Networking

- Support of RS485, Ethernet and WLAN communication
- Support of access by various environment sensors, smart energy meters, and meteo stations
- Support of IV curve online diagnosis with iSolarCloud

Auxiliary Maintenance

- Support of batch inverter parameter setting and software upgrading
- Support of remote desktop function
- Support of grid control instruction and power factor control
- Support of local real-time monitoring
- Support of automatic search and allocation of inverter address

Easy Operation

- Equipped with lighting device for ease of night maintenance
- Plastic enclosure, lighter weight and easier installation

2.3 Networking Application

The COM100 can monitor running information of the PV system in real time and transfer the information to the background.

The COM100 can be connected to iSolarCloud via Ethernet, WLAN or 4G network.

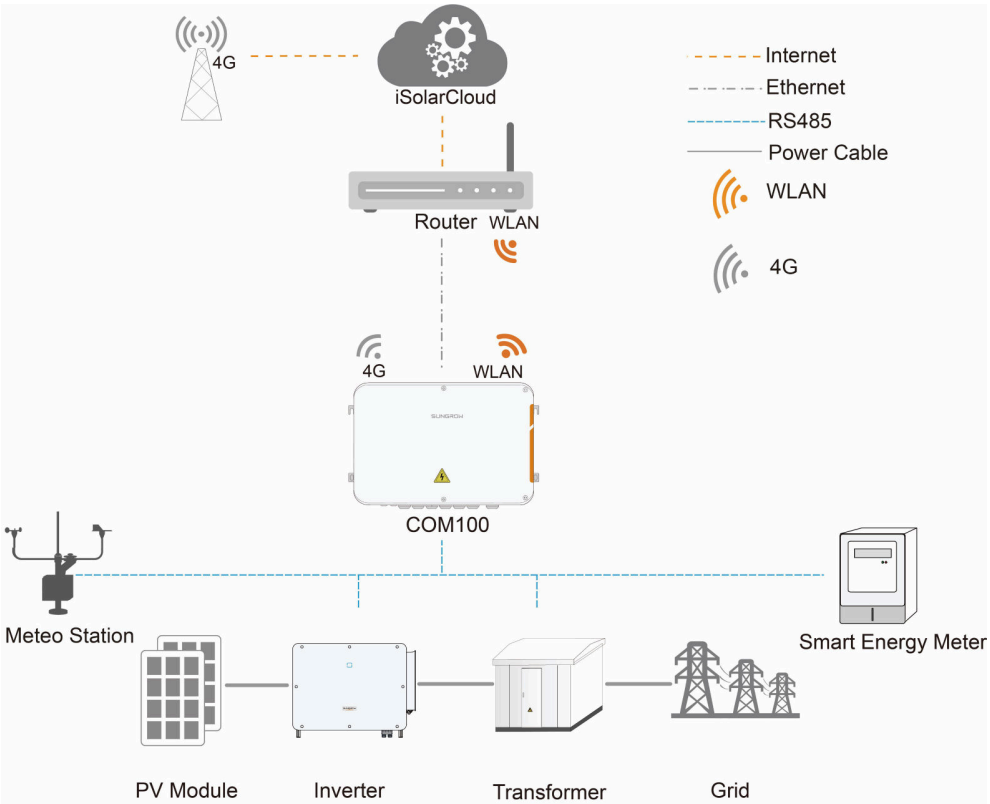

WARNING

The device is a professional product.

Non-professionals are strictly prohibited to install and operate this device.

2.4 Product Introduction

Appearance

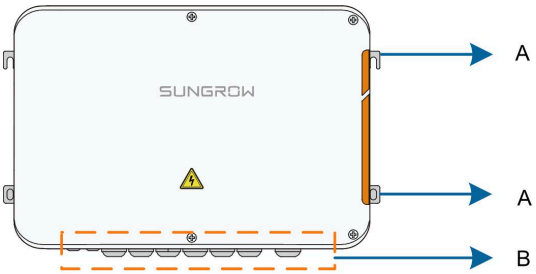

figure 2-1 Appearance

Item	Name	Description
A	Hangers	4, for ease of installation
B	Waterproof terminals	For details about the definition, refer to 4.1 Waterproof Terminal Description.

Dimensions

The following figure shows the dimensions of COM100:

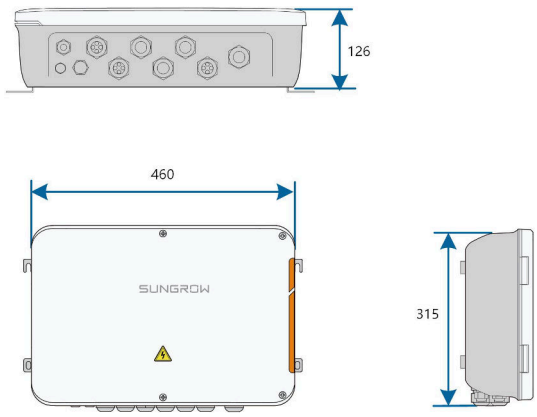

figure 2-2 Dimensions of COM100 (mm)

3 Mechanical Mounting

⚠ WARNING

Respect all local standards and requirements during mechanical installation.

3.1 Unpacking and Inspection

Check that all components have been delivered based on the packing list in the package. The delivered components shall include:

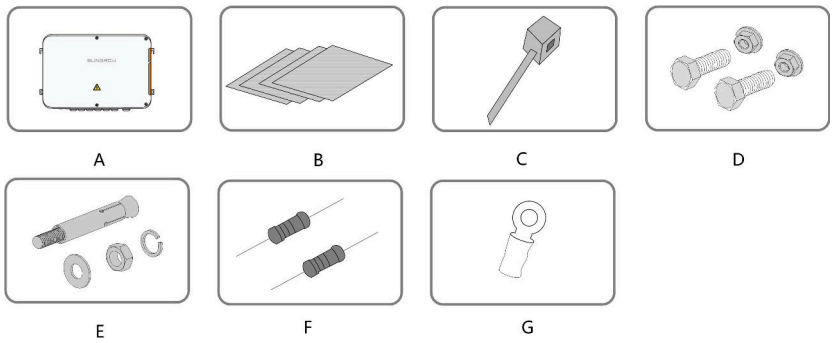

figure 3-1 Packing List

Item	Name	Description
A	COM100	-
B	Documents	Quick installation manual, delivery inspection report, packing list, warranty card, and certificate
C	Cable tie	12, used for binding the cables
D	Hexagon bolt assembly	4, M6 x 45, used for wall-mounting to fasten the device on the metal surface
E	Expansion bolt	6, M6 x 60, used for wall-mounting to fasten the device on the concrete wall
F	Terminal resistor	6 x 120 Ω Note: If there are more than 15 devices connected on the RS485 bus, it is recommended to connect a 120 Ω terminal resistor in parallel on the A and B lines at the head of the bus
G	OT terminal	Used for grounding connection

3.2 Location Requirements

- With the ingress of protection IP66, the COM100 can be installed both indoors and outdoors (more often).
- Operating temperature : -30 °C to +60 °C. Ambient humidity: 0% to 95%, without condensation. If otherwise, the internal components will be damaged.
- Take anti-moisture and anti-corrosion measures.

3.3 Installation Tools

Installation tools include but are not limited to the following recommended ones. If necessary, use other auxiliary tools on site.

3.4 Installation Method

COM100 can be installed on a wall or mounted on a pole.

⚠ WARNING

Be aware of the weight of the COM100 throughout the installation process!

The device may tilt or fall off due to inappropriate operation and cause personal injury!

3.4.1 Wall-Mounting

Mount the COM100 onto the concrete wall or metal surface according to onsite conditions.

DANGER

Avoid drilling holes in the utility pipes and/or cables attached to back of the wall!

NOTICE

Operation personnel should wear goggles and dust mask throughout the drilling process to avoid dust inhalation or contact with eyes.

The following figure shows the installation dimensions of the COM100.

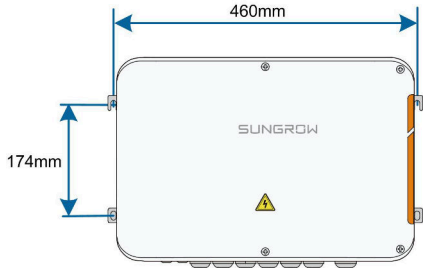

3.4.1.1 Concrete Wall

step 1 Select an appropriate installation surface.

step 2 Mark positions for drilling holes with a marker.

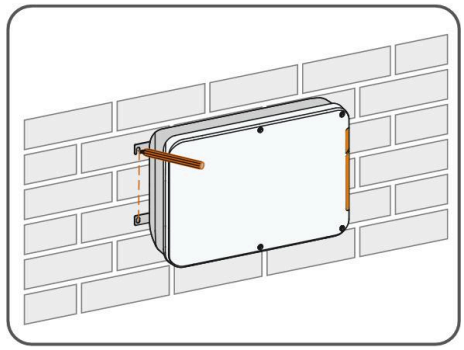

step 3 Drill the holes with a drill according to the marks made before.

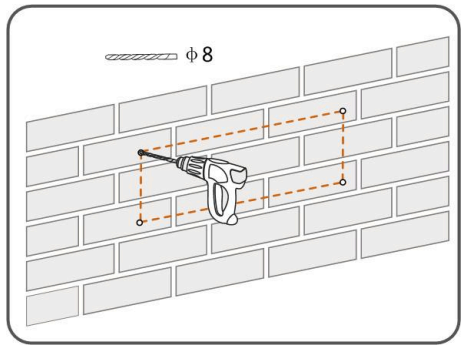

step 4 Use a rubber hammer to secure all the expansion bolts in the delivery accessories to the holes.

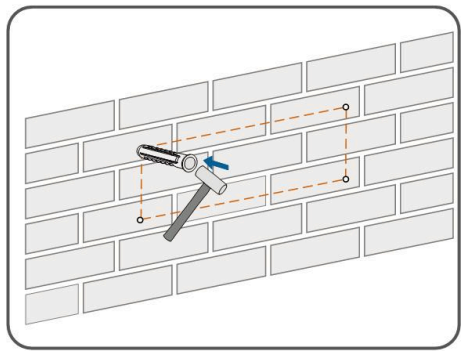

step 5 Use the nuts, flat washers, and spring washers in the delivery accessories to fix COM100 on the installation surface.

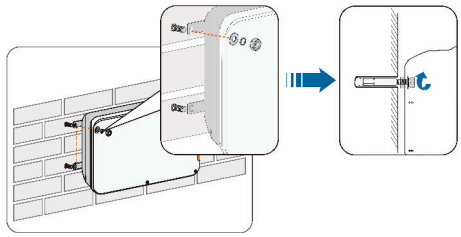

- - End

3.4.1.2 Metal Surface

step 1 Select an appropriate installation surface.

step 2 Mark positions for drilling holes with a marker.

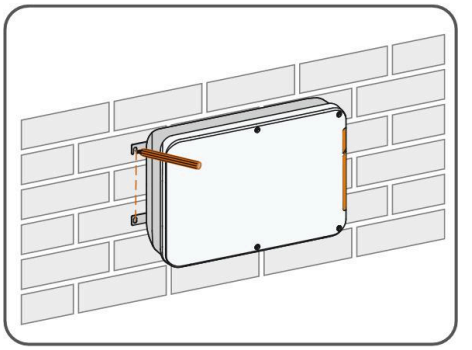

step 3 Drill the holes with a drill according to the marks made before.

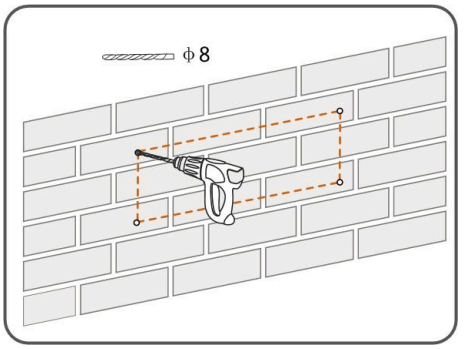

step 4 Use the hexagon bolts and nuts in the delivery accessories to fix COM100 on the installation surface.

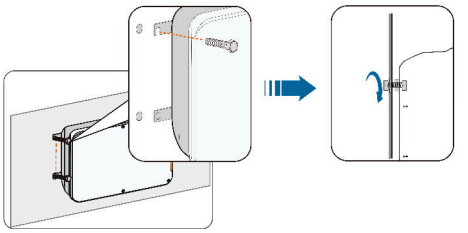

step 5 Check and ensure that the COM100 is firmly in place.

- - End

3.4.2 Pole-Mounting (Optional)

COM100 can be mounted on a pole. If this scheme installation is needed, contact SUNGROW for the design drawings.

Accessories supplied with the COM100 include matching screw assembly, nuts, brackets, clamps, etc.

The installation procedure is as follows:

step 1 Anchor the COM100 to the mounting-brackets with the screw assembly via the mounting hangers, as shown in the figure below.

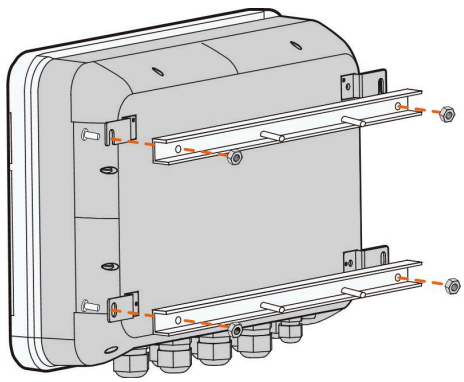

step 2 Fix the mounting-brackets to the pole with clamps and nuts.

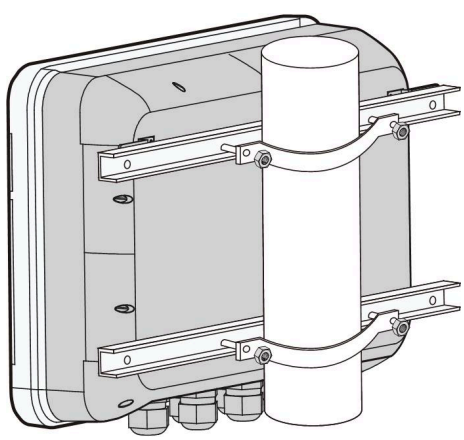

- - End

3.5 Magnetic Base Antenna Connection (Optional)

COM100 has a built-in antenna. If COM100 is installed in a container, a magnetic base antenna must be purchased to remove signal shielding.

step 1 Release the 4 screws on the front side of the COM100 and open the front cover of the cabinet.

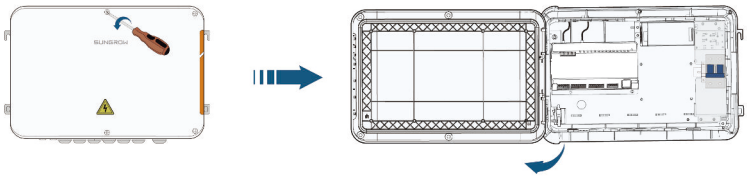

step 2 Unscrew the built-in antenna of COM100.

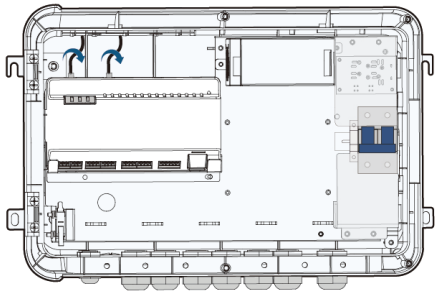

step 3 Loosen the "RF" waterproof terminal on the bottom of the COM100.

step 4 Lead the antenna through the "RF" waterproof terminal, and secure clockwise the nut at the end of the antenna to the corresponding terminal on the bottom of the Logger1000.

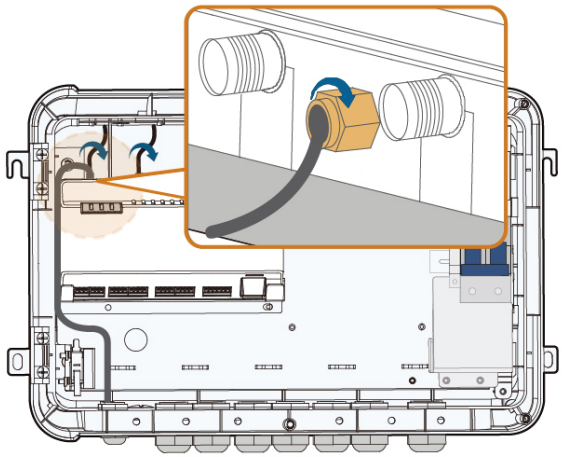

step 5 Place the sucker antenna base on a metal surface outside the container.

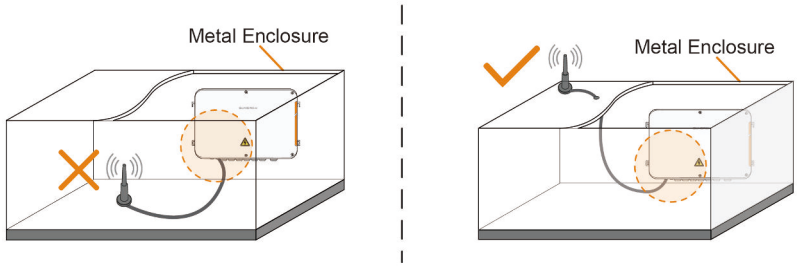

- - End

4 Electrical Connection

4.1 Waterproof Terminal Description

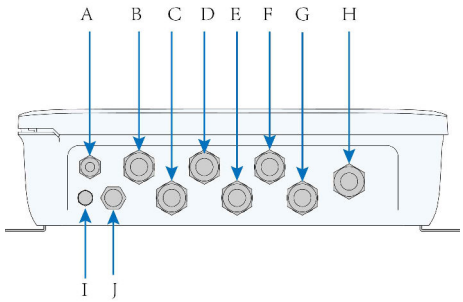

figure 4-1 Waterproof Terminals on Bottom of COM100

table 4-1 Description of Waterproof Terminals

No.	Tag	Description	Recommended Cable Specifications	Cable Type
A	RF	Reserved, antenna waterproof terminal	-	-
B	AI/DI	AI/DI waterproof terminal	2 x (1 - 1.5) mm^2	Outdoor anti-ultraviolet twisted pair with a shielding layer
C	DI/DRM	DI/DRM waterproof terminal		
D	RS485-1	RS485 waterproof terminal	2 x (0.75 - 1.5) mm^2	
E	ETH	Ethernet waterproof terminal	-	CAT5 outdoor anti-ultraviolet cable with a shielding layer
F	RS485 -2/IOM	RS485/IO waterproof terminal	2 x (0.75 - 1.5) mm^2	Outdoor anti-ultraviolet twisted pair with a shielding layer
G	PLC	PLC waterproof terminal	3 x (4 - 10) mm^2	Outdoor anti-ultraviolet wire

No.	Tag	Description	Recommended Cable Specifications	Cable Type
H	AC (100 – 277V)	Waterproof terminal for 100 VAC – 277 VAC power supply	2 x (1 - 1.5) mm^2	Outdoor anti-ultraviolet wire
I	-	Waterproof and dustproof ventilation valve	-	-
J	-	Reserved	-	-

4.2 Internal Structure

The internal structure of the COM100 is shown in the following figure.

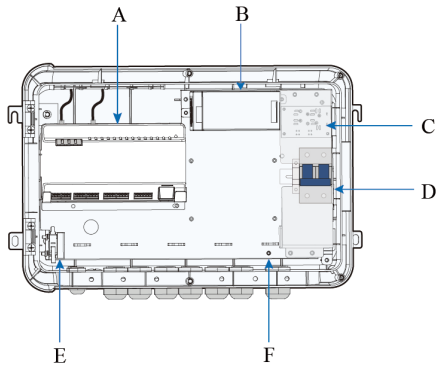

No.	Description
A	Logger1000A-EU
B	Switch-mode power supply,and 24VDC power supply
C	Surge protection device
D	Miniature circuit breaker, used to connect/disconnect the external 220VAC power supply
E	Lighting device, turn on the light before opening the front cover of the cabinet for ease of night maintenance
F	Grounding terminal

4.3 Preparation Before Cable Connection

step 1 Release the 4 screws on the front side of the COM100 and open the front cover of the cabinet, as shown in the figure below.

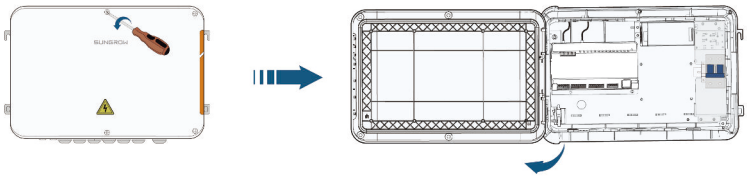

step 2 Insert the Micro-SIM card into the slot below the Logger1000 inside the COM100.

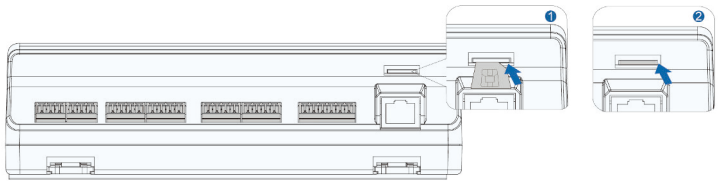

Micro-SIM Card Requirements

- Size: 12mm × 15mm.
- Recommended SIM card provider: Telekom, Vodafone, T-Mobile, or O2.
- Ensure that the SIM card has been properly configured the monthly data plan.

NOTICE

If using a nano-SIM card with an adapter, ensure that the nano-SIM is properly seated, and is correctly oriented to avoid improper insertion, difficulty in removing the SIM, or potential damage to the device.

If the SIM card is protected with a personal identification number (PIN), insert the SIM into a smart device and unlock it using the PIN code first. Contact the smart device manufacturer or SIM card provider if you need further assistance.

table 4-2 Monthly data required

Device Connected	Monthly Data Required
Inverter	Number of inverters × 25 MB + 25 MB
Optimizer	Number of optimizers × 0.52 MB + 130 MB
Meter and meteo station	Number of meters and meteo stations × 12.5 MB + 12.5 MB

For detailed information about the SIM card and estimated data usage, refer to the Logger1000A-EU user manual.

step 3 Turn the power switch inside the COM100 to "OFF"

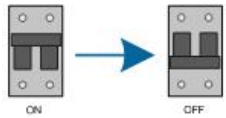

- - End

4.4 Ground Connection

step 1 Strip the insulation cover of the grounding cable and crimp the stripped cable to the OT terminal.

step 2 Fasten the grounding cable in the sequence of cross recessed fastener assembly, OT terminal, and grounding hole.

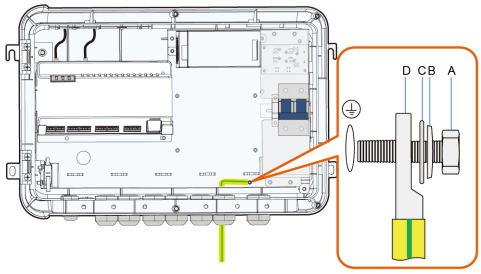

Item	Description
A	M4 x 10 cross recessed fastener assembly
B	Flat washer
C	Spring washer
D	OT terminal

- - End

4.5 External AC Power Supply Connection

COM100 is designed with an external AC power port at the bottom of the external 220 V AC power breaker, as shown in the figure below.

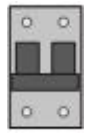

step 1 Loosen the two screws in the figure below and open the baffle.

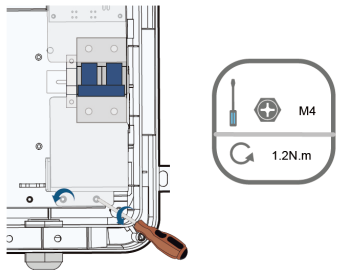

step 2 Loosen the "AC (100 – 277V)" waterproof terminal, and insert the external power supply cable through the waterproof terminal into the corresponding terminal on the miniature circuit breaker inside the COM100.

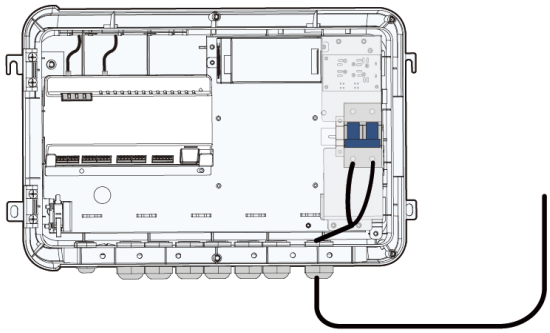

step 3 Strip and connect the cable to the corresponding terminal inside the COM100.

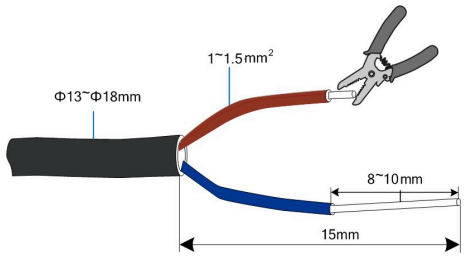

step 4 Install the baffle and use a screwdriver to fasten the screws.

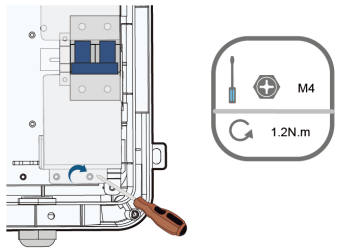

step 5 Fasten the "AC (100 – 277V)" waterproof terminal.

- - End

4.6 RS485 Port

When connecting the inverter to external devices with the RS485 communication cable, make sure that the external devices are protected against lightning.

4.6.1 Connect to Device with RS485 Port

RS485 communication terminals inside the COM100 are located at the bottom of the Logger, including A1B1, A2B2, and A3B3.

Communication cable specification:

Cable	Type
RS485 cable	Outdoor ultraviolet protection shielded twisted pair (STP)

step 1 Loosen the "RS485-1" or "RS485-2/IOM" waterproof terminal on the bottom of the COM100.

step 2 Lead the RS485 cable through the "RS485" waterproof terminal. Strip the cable jacket and insulation layer of the communication cable with a wire stripper respectively.

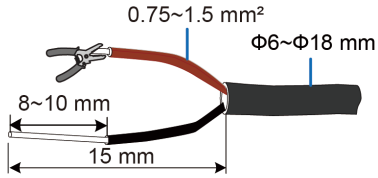

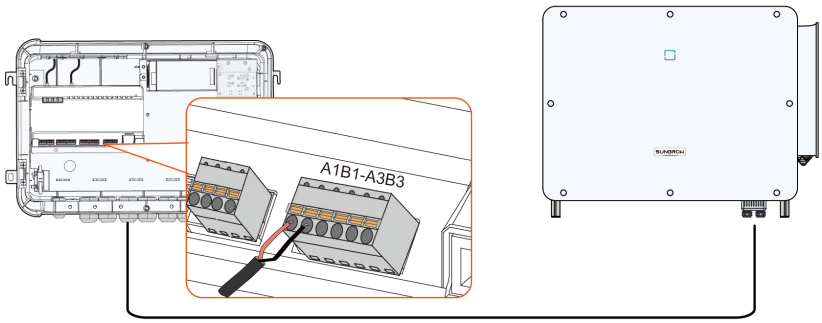

NOTICE

RS485A is connected to port A and RS485B is connected to port B.

step 3 Connect the stripped cable to the RS485 ports of the Logger1000, as shown in the figure below.

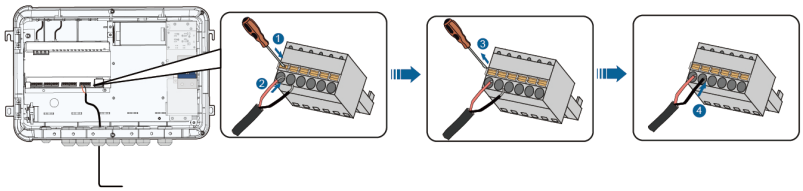

step 4 Fasten the "RS485-1" or "RS485-2/IOM" waterproof terminal.

- - End

4.6.2 Connect to Device with RJ45 Port

Communication cable specification:

Cable	Type
ETH communication cable	Outdoor STP Ethernet cable

step 1 Loosen the "RS485-1" or "RS485-2/IOM" waterproof terminal on the bottom of the COM100.

step 2 Lead the Ethernet cable through the "RS485-1" or "RS485-2/IOM" waterproof terminal. Strip the insulation layer of the communication cable with an Ethernet wire stripper.

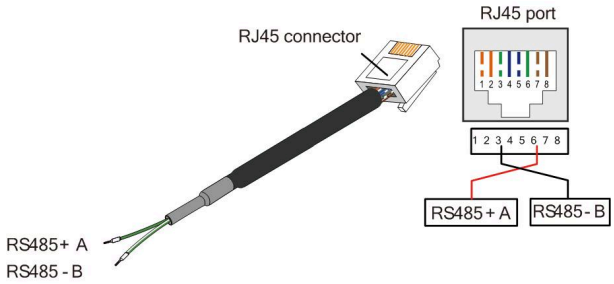

table 4-3 Correspondence Between Wire Colour and Pin of RJ45 Connector

Pin	Color	Pin	Color
1	White-orange	5	White-blue
2	Orange	6	Green
3	White-green	7	White-brown
4	Blue	8	Brown

step 3 Insert the stripped communication cable into the RJ45 connector in the correct order, and crimp it with a crimping tool.

step 4 Insert the RJ45 connector of the Ethernet communication cable into the "ETH" port of the Logger1000.

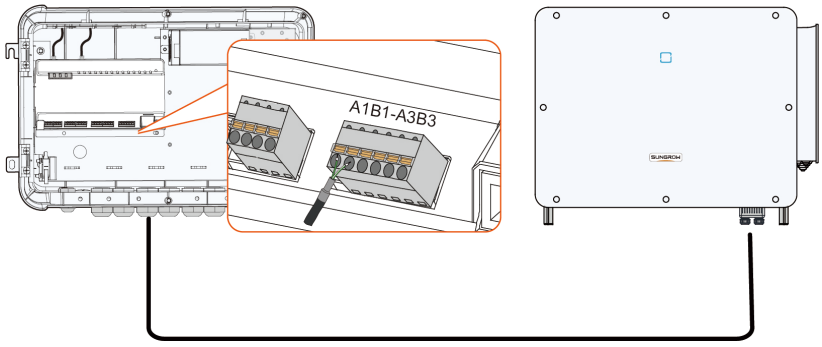

step 5 Fasten the "RS485-1" or "RS485-2/IOM" waterproof terminal.

- - End

4.7 Ethernet Connection

The COM100 can be connected to the background of the PV system via the Ethernet port, and the communication protocol is standard Modbus TCP or IEC104.

step 1 Prepare an Ethernet cable of proper length.

step 2 Insert one end of the cable into the port of the Ethernet switch and the other end to the "ETH" port of the Logger1000 inside the COM100.

step 3 Set IP address of the ETH port to be within the same network segment as that of the background monitoring system.

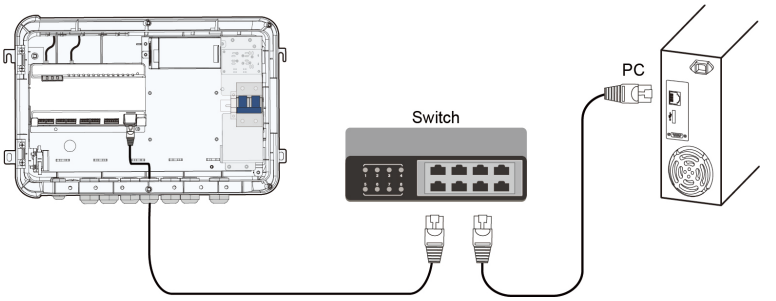

figure 4-2 Connecting to Background of PV System

NOTICE

Default IP of the "ETH": 12.12.12.12.

- - End

4.8 External DC Power Supply Connection

The internal 24V DC power supply can be connected via the "24V IN" and "24V OUT" ports at the bottom of the Logger. The rated output power is 10W and the maximum power is 12W.

The COM100 can supply the connected external device with 24V DC power.

step 1 Loosen an unused waterproof terminal on the bottom of the COM100.

step 2 Lead the DC cable through the waterproof terminal. Strip the protective layer and insulation layer by appropriate length with a wire stripper.

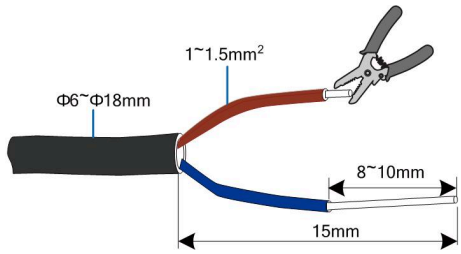

step 3 Insert the stripped DC cable into the port "24V OUT +" and "24V OUT -" of the Logger1000.

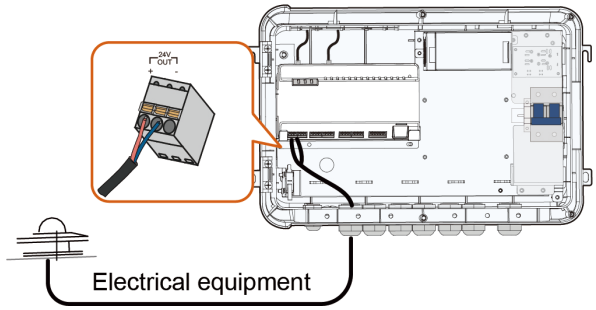

step 4 Fasten the waterproof terminal.

- - End

5 Commissioning

5.1 Inspection Before Commissioning

No.	Item	Result
1	All cables are intact, well insulated, and appropriately dimensioned	□
2	All cables are connected correctly and firmly	□
3	The polarity of the power supply cable is correct. The ground cable is reliably grounded	□
4	Seal the gaps at the bottom of the waterproof terminals with fireproof mud	□

5.2 Commissioning Steps

If all the foregoing items meet requirements, start the COM100 for the first time and proceed as follows.

No.	Step	Result
1	Inspect before commissioning.	□
2	Turn the miniature circuit breaker inside the COM100 to ON.	□
3	Check whether the status of indicators on Logger1000 inside the COM100.	□
4	Close the front cover of the COM100 and tighten the screws.	□
5	Enable WLAN on the PC and connect it to the wireless network of the built-in Logger1000 (no password required). The wireless network name is SG-X, where X is the SN of the Logger1000, which can be checked on the shell of Logger1000. Enter 11.11.11.1 in the address bar of IE or Chrome browser and log in the Web.	□
6	Make sure the communication cable connecting the device and the COM100 is firmly in place. Close the DC circuit breaker of the inverter to ensure that the inverter is supplied with power.	□

No.	Step	Result
7	Configure related parameters referring to the user manual of Logger1000.	□
8	If Logger1000 automatically obtains the address, the DHCP must be enabled on the router.	□
9	Set the iSolarCloud address as needed. The default server is **European Server**. Users in other regions select **International Server**.	□
10	Check the data of SUNGROW string inverter for correctness on **Realtime Values** interface.	□
11	Create new plants via the iSolarCloud App and check the iSolarCloud data for correctness.	□

The auto search function is available for SUNGROW residential inverters and string inverters only whose addresses are automatically allocated.

Devices of other types, such as Smart Energy Meter and box-type substation, can be connected to Logger1000 inside the COM100 by clicking **Add Device**.

Addresses of the devices connected to the same communication port should be different from each other.

Save the settings after operation. Otherwise, the settings will not take effect.

When creating a new plant on the iSolarCloud App, users can scan the QR code on the front label on the Logger1000 or manually input the S/N to add communication equipment. For details, refer to the **iSolarCloud App User Manual** . Scan the QR code below to obtain the **iSolarCloud App User Manual** .

6 WEB Interface

6.1 Operating Environment Requirements

Item	Parameter
System	WIN7 and above, Mac OS
Browser	IE11 and above, Chrome45 and above, Safari11 and above
Min. resolution	1366 x 768
CPU	CPU frequency higher than 2.5 GHz

6.2 PC Network Configuration

The COM100 and the PC can communication via the Ethernet or WLAN, and the corresponding network configuration is as follows:

Communication Method	Configuration	WEB Address
(ETH) Ethernet	Set the IP address of the PC and the COM100 to the same network segment. The IP address of the COM100 is 12.12.12.12. Therefore, the IP address of the PC should be set to 12.12.12.125, and the subnet mask is 255.255.255.0.	12.12.12.12
WLAN	Enable WLAN of the PC. Search for the wireless network name of the Logger1000 and connect to it.	11.11.11.1

Note: Access the WEB page in either of the methods according to actual conditions.

6.3 Login Steps

This section provides a brief overview of the login procedure for the Web UI, specifically using a WLAN connection.

step 1 On your PC, navigate to the wireless network settings, and connect to Logger1000's network.

> The SSID follows the format “SG-[device S/N number]”] (for example, SG-A1234567890). The serial number (S/N) can be found on the Logger1000's front label.
>
> This wireless network does not require a password for connection.

step 2 Open your web browser and enter **11.11.11.1** in the address bar and press **[Enter]** to navigate to Logger1000's Web UI.

step 3 Log in as a O&M user.

> To enhance account security, the Logger1000 web interface defaults to a login page starting from firmware version P005 onwards. O&M users are required to enter their username to log in. The default username for O&M user is “maintain”, and the default password remains unchanged.

Enter your login credentials based on the page displayed.

If...	Then...
The Web UI navigates to the login page.	a. Enter the username: **maintain**. b. Enter the default password: **pw1111**. c. Click **Login**.
The Web UI displays the page **General Information**.	a. In the upper right of the page, click **Login** to open the dialog box. b. Enter the default password: **pw1111**. c. Click **Login**.

After logging in, the Web UI defaults to the interface with O&M user permissions.

- - End

It is recommended to change the password after initial login. To change your password, on the Web UI, click **O&M User > Modify Password**.

Not changing the default password can lead to unauthorized access, and continued use of the initial password increases the risk of theft and hacking. Additionally, loss of the password can prevent access to the device, potentially causing losses to the power station. In these cases, SUNGROW shall not be liable for any losses incurred due to non-compliance with the recommended security practices.

6.4 Interface Introduction

Users may perform the following operations after entering the WEB interface.

Operation	Path	Manual and Website
Create new plant	1. Click **About** on the WEB interface to obtain the QR code. 2. Scan the QR code with the iSolarCloud App and create new plants according to the prompt information.	**iSolarCloud App User Manual** http://support.sungrowpower.com/web/productList?f=3&directoryId=233
Configure Logger	-	**Logger1000A-EU User Manual** https://support.sungrowpower.com/productDetail?directoryId=1561886793213054977

7 Appendix

7.1 Technical Parameters

Parameter	COM100D-EU
Basic data	
Supported Device Number	Max. 30
Communication	
RS485 interface	3
Ethernet	1 x RJ45, 10/100/1000Mbps
Digital Input	5, Max. 24V dc
Analog Input	4, support 4 ~ 20 mA or 0 ~ 10 V dc
Operation Band	LTE(FDD): B1, B3, B7, B8, B20, B28A LTE(TDD): B38, B40, B41 GSM: B3/B8
WLAN(AP Mode)	802.11 a/b/g/n/ac; HT20/40/80MHz; 2.4GHz/5GHz
Power supply	
AC input	100 VAC - 277 VAC, 50 Hz / 60 Hz
Power consumption	Typ. 30 W, Max. 40 W
Night light for maintenance	< 1 W
Ambient conditions	
Operating Temperature	-30 °C ~ +60 °C
Storage Temperature	-40 °C ~ +70 °C
Allowable relative humidity range	0%~95% ,non-condensing
Max. operating altitude	4000m
Protection class	IP66
Mechanical parameters	
Dimensions (W x H x D)	460 mm x 315 mm x 126 mm
Weight	4.9 kg
Installation	Wall mounted,Bracket mounted,Pole mounted, outdoor and indoor
Box material	PC

Parameter	COM100D-EU
Cable specification	AC cable: outdoor UV protection cable of 1-1.5 mm^2, outside diameter 13~18mm RS485 cable: outdoor UV protection shielded twisted pair (STP) of 0.75-1.5 mm^2, outside diameter 6~18mm Ethernet: CAT5 cable, outdoor UV protection shielded, outside diameter 6~18mm AI and DI: outdoor UV protection cable of 0.75 mm^2, outside diameter 4.5~6mm
General Data	
Support for software updates	2 years

7.2 Dry Contact Cable Requirements

The wiring cable used for each COM100 dry contact needs to meet the requirements in the following table.

Dry Contacts	Specification Requirements
RS485	Use outdoor UV rated twisted pair with a shielding layer. The recommended cable diameter is 0.75 –1.5 mm^2. The maximum wiring distance should be less than 1000 m.
AI	The recommended cable diameter is 0.75 mm^2. The recommended maximum wiring distance is 10 m.
DI	The recommended cable diameter is 0.75 mm^2. The recommended maximum wiring distance is 10 m.
Ethernet	Use cat5e or network cable of higher specification. Communication distance should be less than 100 m.

7.3 Quality Assurance

When product faults occur during the warranty period, SUNGROW will provide free service or replace the product with a new one.

Evidence

During the warranty period, the customer shall provide the product purchase invoice and date. In addition, the trademark on the product shall be undamaged and legible. Otherwise, SUNGROW has the right to refuse to honor the quality guarantee.

Conditions

- After replacement, unqualified products shall be processed by SUNGROW.
- The customer shall give SUNGROW a reasonable period to repair the faulty device.

Exclusion of Liability

In the following circumstances, SUNGROW has the right to refuse to honor the quality guarantee:

- The free warranty period for the whole machine/components has expired.
- The device is damaged during transport.
- The device is incorrectly installed, refitted, or used.
- The device operates in harsh conditions beyond those described in this manual.
- The fault or damage is caused by installation, repairs, modification, or disassembly performed by a service provider or personnel not from SUNGROW.
- The fault or damage is caused by the use of non-standard or non-SUNGROW components or software.
- The installation and use range are beyond stipulations of relevant international standards.
- The damage is caused by unexpected natural factors.

For faulty products in any of above cases, if the customer requests maintenance, paid maintenance service may be provided based on the judgment of SUNGROW.

Product data such as product dimensions are subject to change without prior notice. The latest documentation from SUNGROW should take precedence in case of any deviation.

7.4 Contact Information

In case of questions about this product, please contact us.

We need the following information to provide you the best assistance:

- Model of the device
- Serial number of the device
- Fault code/name
- Brief description of the problem

For detailed contact information, please visit: **https://en.sungrowpower.com/contactUS**

SUNGROW

Sungrow Power Supply Co., Ltd.

www.sungrowpower.com

M-D-000332